DATE	REV	DESCRIPTION	BY	CHKD

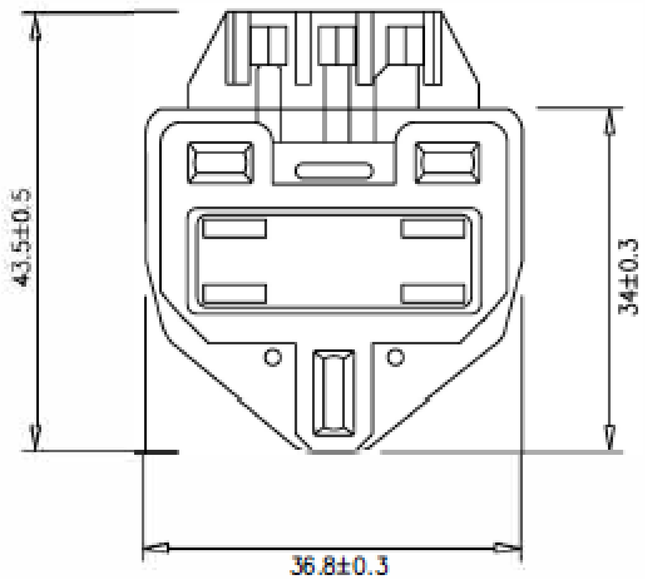

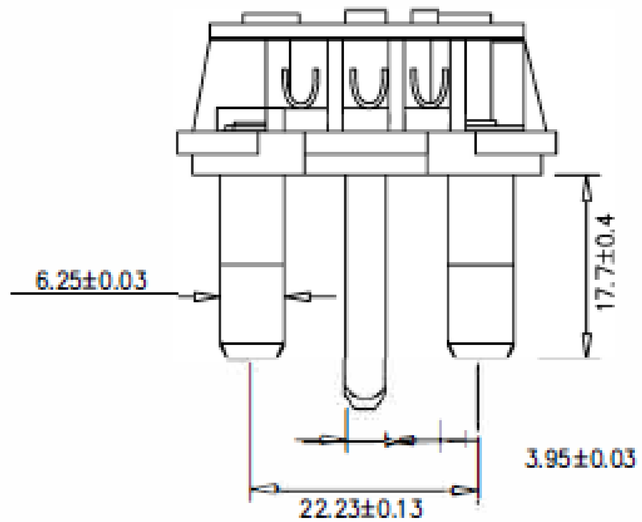

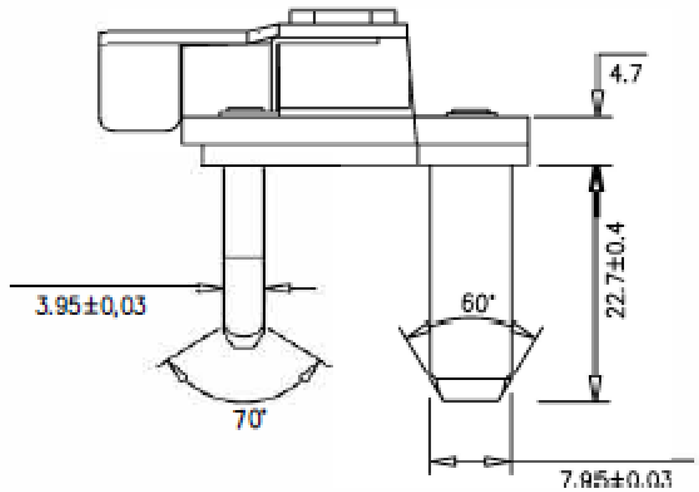

Unless specified on the drawing, tolerances are per the follows: ± 0.2

DEVETECH ELECTRONICS

DEVETECH ELECTRONICS CO. LTD

		CUSTOMER		FINISH	CHECKER	APPROVAL
		SCALE	2:1	丁以建		
3RD		UNIT	MM	2017\04\23		
ITEM	**English plug with earth**		DRAW NO.	**HX-13N-2 (550942)**		