DATE	REV	DESCRIPTION	BY	CHKD

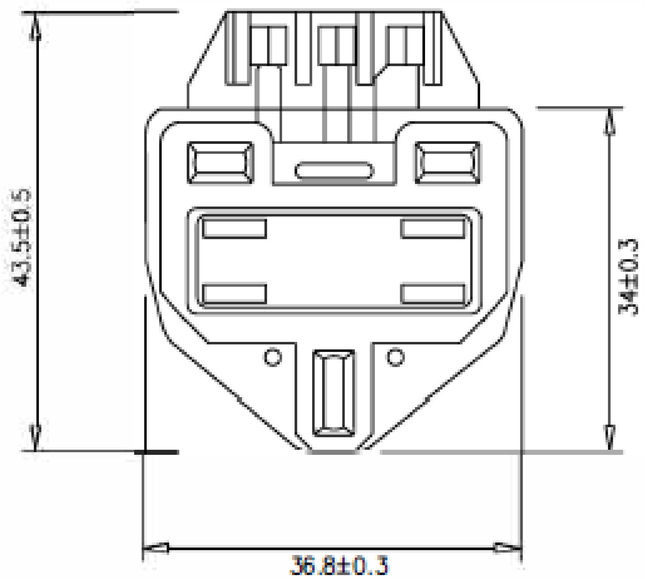

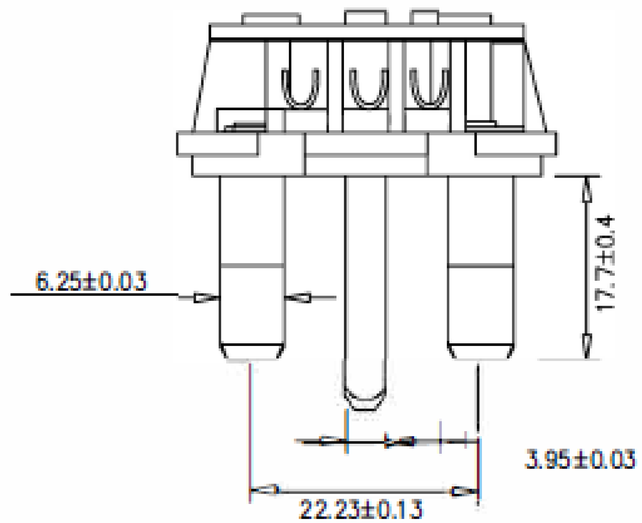

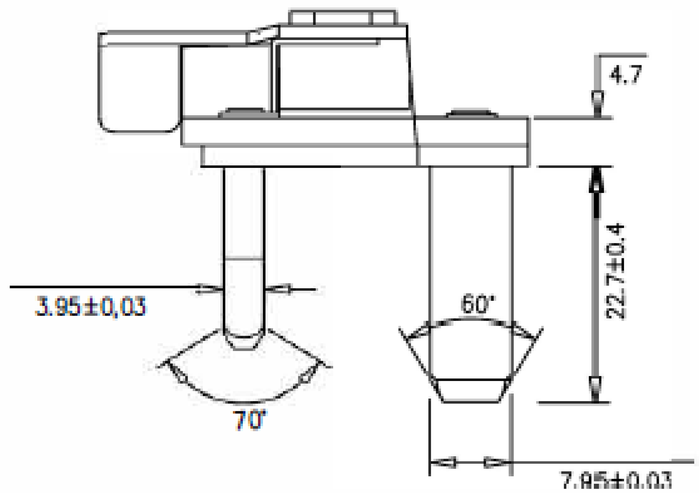

Unless specified on the drawing, tolerances are per the follows: ± 0.2		DEVETECH ELECTRONICS	DEVETECH ELECTRONICS CO. LTD			
		CUSTOMER		FINISH	CHECKER	APPROVAL
		SCALE	2:1	丁以建		
3RD		UNIT	MM	2017\04\23		
ITEM	English plug with earth		DRAW NO.	HX-13N (519079)		