RoHS
COMPLIANT

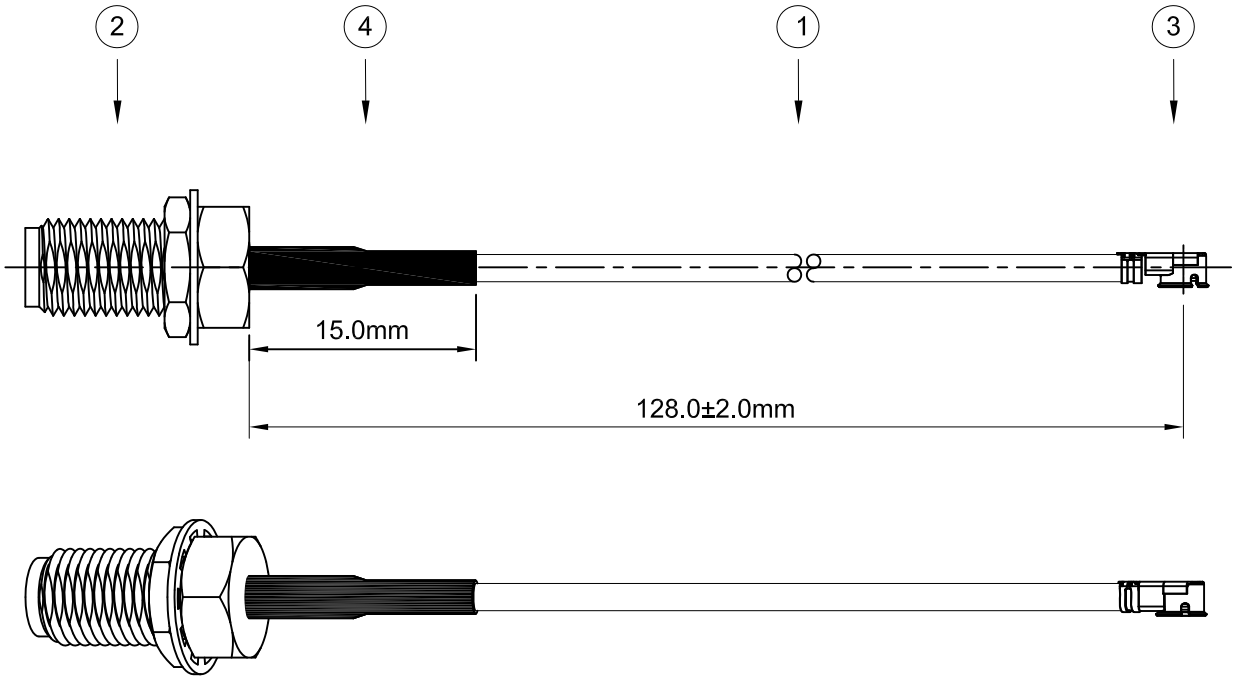

NO.	DESCRIPTION	QT'Y	MATERIAL	P/N
4	HEAT SHRINK TUBE	1	Ø2.5mm L=15mm	52012809
3	CONNECTOR	1	IPEX 178	01090609
2	CONNECTOR	1	SMA(F) S/T R/P Bulkhead Jack	05011509
1	CABLE(BROWN)	1	RG-178B/U	37010309

LTR	REVISION RECORD	ECN	DR/CHK	DATE

DO NOT SCALE DRAWING

GENERAL TOLERANCES
DIM: .X±0.25(0.01) .XX±0.12(0.005)
ANGULAR: ±5°

DIMENSION CLASSIFICATION
■: CRITICAL ⊠: MAJOR

REVISE ONLY ON CAD SYSTEM

MATERIAL : SEE TABLE
FINISH : SEE TABLE

DRAWN BY: David
CHK'D BY: Eric
APP'D BY : James
SCALE : 2 : 1
SHEET 1 OF 1
UNIT : mm

EnterTec Technology Inc.

TITLE: SMA(F) S/T R/P Bulkhead Jack / RG-178 / IPEX , L=128mm

DWG. NO.: 20191218-01
REV 1
FILE. NO.: F:\Drawing\20191218